Testing nonlocality of single photons using cavities

T. Pramanik [a,*], S. Adhikari [b], A.S. Majumdar [a], D. Home [c]

[a] S.N. Bose National Centre for Basic Sciences, Salt Lake, Kolkata 700 098, India
[b] Institute of Physics, Sainik School Post, Bhubaneswar 751005, India
[c] CAPSS, Department of Physics, Bose Institute, Kolkata 700091, India

A B S T R A C T

A scheme is formulated for testing nonlocality of single photons by considering the state of a single photon that could be located within one of two spatially separated cavities. The outcomes of four experiments on this state involving the resonant interactions of two-level atoms with these cavities and a couple of other auxiliary ones is shown to lead to a contradiction with the criterion of locality.

1. Introduction

In classical physics two distantly separated particles obey Einstein's locality, i.e., the outcome of a measurement on one of the particles does not effect what is being measured on the other. On the other hand, the nonlocal nature of the quantum world has for long attracted deep attention among physicists ever since the famous EPR paper [1]. Specifically, though information cannot be transmitted between spacelike separated observers, any realistic hidden variable theory capable of reproducing the results of quantum theory would have to be nonlocal. A precise identification of nonlocality as a crucial ingredient of distinction between classical and quantum physics was performed by Bell in his seminal paper [2]. The violation of Bell's inequality which has been demonstrated in a number of experiments [3], underlines the nonlocality of quantum states of two or more particles.

If nonlocality is to be regarded as an inherent feature of the quantum world, it is difficult to understand why this feature should be manifest only at the level of two or more particles. A quantum state should reveal its nonlocal property irrespective of the number of particles associated with it. At the field theoretic level particles are regarded as excitations of the quantum vacuum, and there is no fundamental difference between a single particle excitation, and a two-particle one. Specifically, a single particle should also be able to exhibit nonlocality under particular circumstances, as was indeed indicated by Einstein in 1927 [4] while presenting the collapse of a single particle wave packet to a near eigenstate as an example of quantum nonlocality. It took more than half a century since then for the concept of nonlocality of single particles to be more precisely formulated by Tan, Walls and Collett [5] through the idea that measurements made on two output channels from a source could violate locality even if one particle is emitted from the source at a time. However, additional assumptions in this proposal narrowed down the scope of its implementation considerably [6]. In this context it may be noted that a single particle could carry two or more degrees of freedom (i.e., the spatial and polarization variables in case of a photon), and it is possible to demonstrate the violation of Bell-type inequalities in such cases signifying the violation of non-contextuality at the level of a single particle [7]. Further, entanglement between different degrees of freedom of the same particle could be exploited as resource for performing information processing tasks [8]. On the other hand, the establishment of nonlocality at the level of a single particle has still remained a subtle issue.

A demonstration of quantum nonlocality for two entangled particles without the use of mathematical inequalities, was formulated by Hardy [9]. Subsequently, he proposed a scheme to demonstrate the nonlocality of single photons [10] without the supplementary assumptions made in the work of Tan, Walls and Collett [5]. Hardy's scheme was criticized for not being experimentally realizable by Greenberger, Horne and Zeilinger (GHZ) [11] who in turn proposed their own scheme which required additional particles for implementation. Here again, the issue of whether nonlocality is purely a multipartite effect could not be settled since it could be debated that the additional particles were responsible for introducing nonlocality into the system. Another proposal showing an incompatibility between quantum mechanics and any local deterministic ontological model in terms of particle coordinates was formulated for single photon states [12]. Recently, Dunningham and Vedral [13] have formulated a scheme for demonstrating nonlocality of single photons, overcoming several problems of earlier proposals. Their scheme which relies on the use of mixed states, is experimentally realizable, as claimed by the authors, but has still not been practically performed.

* Corresponding author.
E-mail addresses: tanu.pram99@bose.res.in (T. Pramanik), satyabrata@iiopb.res.in (S. Adhikari), archan@bose.res.in (A.S. Majumdar), dhome@bosemain.boseinst.ac.in (D. Home).

The notion of single particle nonlocality is of such conceptual importance in the physical interpretation of quantum theory, that it is worthwhile to think of more proposals in order to demonstrate it beyond any reasonable doubt. In this regard, it may be noted that as different from the case of nonlocality of two particles, single particle nonlocality has still not been conclusively demonstrated experimentally in a manner free of conceptual loopholes. Note here that an experiment performed earlier by Hessmo et al. [14] for exhibiting single photon nonlocality was based on the schemes of Tan, Walls and Collett [5] and Hardy [10], and hence, not free of the conceptual problems raised by GHZ [11] and others [13]. The scheme proposed by Dunningham and Vedral [13] promises to circumvent those problems, but is yet to be experimentally implemented. With the above perspective, in this Letter we present a proposal for demonstrating nonlocality of single photons inside cavities. The formulation of our scheme is based on atom–photon interactions in cavities, a well-studied arena on which controlled experiments have been performed for many years now [15]. The ingredients for our proposal are two-level atoms, and single-mode high-Q cavities which are tuned to resonant transitions between the atomic levels. For example, the use of Rydberg atoms and microwave cavities in testing several fundamental aspects of quantum mechanics have been proposed [16], and various interesting experiments have been performed by keeping dissipative effects under control [17].

2. Atom–cavity interaction dynamics

We consider the dynamics of a two-level atom passing through a cavity, which under the dipole and rotating wave approximations is described by the Jaynes–Cummings interaction Hamiltonian [18, 19]

$$H^I(r) = G(r)\big(a\sigma_+ + a^\dagger\sigma_-\big), \tag{1}$$

where $\sigma_\pm = \sigma_x \pm \sigma_y$ denote the Pauli spin operators for a two-level atom, and a, $a^\dagger$ are the annihilation and creation operators, respectively, for a photon in single mode cavity. The atom–field coupling strength may be expressed as $G(r) = \Omega_0(\hat{\mathbf{d}}_{eg}.\hat{\mathbf{e}}(r))f(r)$, where Ω_0 is the peak atomic Rabi frequency, $\hat{\mathbf{d}}_{eg}$ is the orientation of the atomic dipole moment, and $\hat{\mathbf{e}}(r)$ is the direction of the electric field vector at the position of the atom. The profile $f(r)$ has an exponential envelop centered about the point in the atom's trajectory that is nearest to the center of the cavity, r_0 [18,19]. Within this envelope, the field intensity oscillates sinusoidally, and for the fixed dipole orientation, variations in the relative orientation of the dipole and electric field gives a sinusoidal contribution, i.e.,

$$f(r) = e^{-\frac{|r-r_0|}{R_{def}}}\cos\left[\frac{\pi}{a_l}(r-r_0)\right], \tag{2}$$

where R_{def} defines the spatial extent of the mode which is at most a few times the lattice constant (a_l) for a strongly confined mode in a photonic band gap [18].

The atom–field state after an initially excited atom has passed through a cavity (which is initially in in zero photon state) can be written as

$$|\phi_e\rangle = \alpha_1(t)|e\rangle|0\rangle + \alpha_2(t)|g\rangle|1\rangle, \tag{3}$$

where $\alpha_{1(2)}$ is the amplitude of the atom being in excited (ground) state and t is the interaction time of the atom with the cavity, with

$$\alpha_1(t) = \cos\left[\int_0^t G(t')\,dt'\right],$$

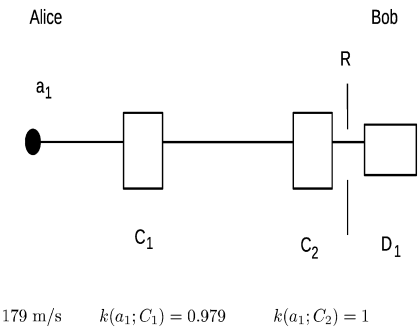

Fig. 1. Experimental set up for creating the state given by Eq. (6). A two-level atom in its upper level traverses the cavities C_1 and C_2, before being detected in its lower level by the detector D_1. ($v_{a_1} = 179$ m/s, $k(a_1; C_1) = 0.979$, $k(a_1; C_2) = 1$.)

$$\alpha_2(t) = \sin\left[\int_0^t G(t')\,dt'\right], \tag{4}$$

where we have replaced $(r - r_0)$ by $(vt - b)$ with v being the velocity of the atom in the cavity and $2b$ the effective length of interaction in the cavity. Setting the value of the interaction time $t = 2b/v$, it is possible to obtain the exact expressions for the $\alpha_{1(2)}$, i.e.,

$$\alpha_{1(2)} = \cos(\sin)\left[\frac{2a_l R_{def}\Omega_0 k e^{-\frac{b}{R_{def}}}\left(a_l e^{\frac{b}{R_{def}}} + \pi R_{def}\sin(\frac{\pi b}{a_l}) - a_l\cos(\frac{\pi b}{a_l})\right)}{v(a_l^2 + \pi^2 R_{def}^2)}\right] \tag{5}$$

with $k = \hat{\mathbf{d}}_{eg}.\hat{\mathbf{e}}(\mathbf{r})$, which can be chosen to take values from 0 to 1. Following [19], we henceforth set $a_l = 624$ nm $= R_{def}$, $b = 10R_{def}$, and $\Omega_0 = 1.1 \times 10^{10}$ rad/s in our calculations.

3. State preparation

The scheme for demonstrating nonlocality that we use in the present work is set up as follows. Let Alice and Bob be two spatially well-separated parties who possess two cavities C_1 and C_2, respectively, an atom a_1 and a detector D_1 used in the state preparation process. Alice and Bob also possess an auxiliary cavity and an additional atom each, viz., C_4, a_3 and C_3, a_2 respectively, as well as two detectors D_2 and D_3, respectively, which they could either use or remove depending on the choice of the four different experiments they perform, as described below.

We begin by describing the state preparation process for single photons (see Fig. 1), that we will use for the argument of nonlocality. Initially, the two cavities C_1 and C_2 are empty, i.e., in zero photon states denoted by $|0\rangle_{C_1}$ and $|0\rangle_{C_2}$. Now an atom (say atom-1), initially in the upper of its two possible levels, $|e\rangle_{a_1}$ traverses C_1 with flight time t_{11} and then traverses C_2 with flight time t_{12}. The cavities are tuned to the resonant frequency for transitions between the upper and lower levels of the atom. Now, a $\frac{\pi}{2}R_1$ Ramsey pulse is applied at a frequency resonant with the atomic transition at the departure path of atom-1 (the R_1 pulse is essentially a part of the detection mechanism [15] and causes the transitions $|e\rangle \to \frac{|e\rangle - |g\rangle}{\sqrt{2}}$ and $|g\rangle \to \frac{|e\rangle + |g\rangle}{\sqrt{2}}$). Let us consider the case when atom-1 is detected in the state $|g\rangle_{a_1}$ at the detector D_1. Since the atom is initially prepared in its excited state, and both the cavities are devoid of any photons initially, the atom can make a transition to its lower state only by dumping a single photon in either of the two cavities. It then follows that after detection of the atom the state of the single photon is given by

$$|\psi\rangle = -\alpha_1(t_{11})\alpha_1(t_{12})|0\rangle_{C_1}|0\rangle_{C_2} + \alpha_2(t_{11})|1\rangle_{C_1}|0\rangle_{C_2} + \alpha_1(t_{11})\alpha_2(t_{12})|0\rangle_{C_1}|1\rangle_{C_2} \tag{6}$$

where the second (third) term on the r.h.s. represents the single photon in cavity C_1 (C_2) and no photon in cavity C_2 (C_1). The first term arises as a result of the $\frac{\pi}{2}R_1$ pulse introduced as part of the detection mechanism. This completes our state preparation process. Note that though Eq. (6) representing the state prepared for the following experiments is similar to the single photon states used by Hardy [10] and Dunningham and Vedral [13] in their arguments on single photon nonlocality, the physical constituents are quite different.

It is important to mention here that in the present scheme the state preparation process is separate from the experimental procedure (described below) to infer the nonlocality of the prepared state. Any additional particles introduced by Alice and Bob in the experiments using the state (6), will not cause any additional nonlocality to be introduced in the state (6), as is evident from the following argument. The combined state of all the resources possessed by Alice and Bob together at the beginning of the experiment can be described as

$$|\psi\rangle_{expt} = |\psi\rangle \otimes |0\rangle_{C_4} \otimes |e\rangle_{a_3} \otimes |0\rangle_{C_3} \otimes |e\rangle_{a_2} \tag{7}$$

where the second and fourth term on the r.h.s. correspond to the zero photon states inside auxiliary cavities possessed by Alice and Bob respectively, and the third and fifth term correspond to the excited atomic states of Alice and Bob, respectively. In their experiments Alice and Bob have the choice of performing local unitary operations using their above resources, and detecting their atoms by their respective detectors D_2 and D_3. It is clear that such operations will not in any way impact the nonlocal property of the state $|\psi\rangle$ (6) that we wish to demonstrate. Any nonlocal feature must already have been introduced at the stage of preparation of the state described above.

4. The scheme

Alice and Bob have two options each to proceed. In one of them, they can find out directly whether the photon is inside their own cavity. Operationally, Alice (Bob) has to take an auxiliary atom in a ground state and pass it through her (his) cavity with the choice of parameters $v = 161$ m/s and $k = 1$ (making $\alpha_1 = 0$ and $\alpha_2 = 1$), ensuring that if the photon is present inside the cavity, then the atom is detected in the state $|e\rangle$. On the other hand, if the atom is detected in the state $|g\rangle$, then Alice (Bob) concludes that the photon was not present in her (his) cavity. In the second option Alice (Bob) places an auxiliary (initially empty) cavity in front her (his) cavity. Then an atom in the state $|e\rangle$ is sent through the two cavities successively before being detected by D_2 (D_3). These choices lead us to the following four experiments.

Experiment 1. Alice and Bob both decide to check whether the photon is present inside their own cavity, C_1 and C_2, respectively. In this case, it is clear that (from Eq. (6)) Alice (Bob) either finds a single photon inside her (his) cavity, or nothing. They cannot both find one photon each in their cavities, as the atom-1 dumps only one photon either in C_1 or in C_2. This means that detecting one photon by Alice and one photon by Bob never happens together.

Experiment 2. In this case Alice checks whether the photon is present inside her cavity C_1, as in Experiment 1. Bob takes his auxiliary cavity C_3 in state $|0\rangle_{C_3}$ and passes another atom a_2 in state $|e\rangle_{a_2}$ (shown in Fig. 2) through C_3 and C_2 with flight times t_{23} and t_{22} respectively. Bob then applies a $\frac{\pi}{2}R_1$ pulse on a_2, before detecting it at D_3. Now consider the case when Alice detects no photon inside her cavity C_1. The probability for this case happening is given by $\alpha_1^2(t_{11})$. Then, after Bob passes a_2 through his cavities C_3 and C_2, and applies the $\frac{\pi}{2}R_1$ pulse, suppose that a_2 is

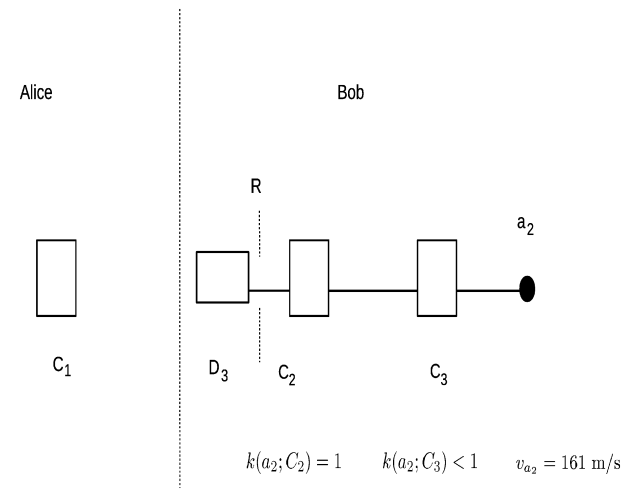

Fig. 2. Set-up for Experiment 2. Alice checks directly for a photon in cavity C_1. Bob passes the atom a_2, initially in its upper level, through C_3 and C_2, before detecting it at D_3 again in its upper level. ($v_{a_2} = 161$ m/s, $k(a_2; C_2) = 1$, $k(a_2; C_3) < 1$.)

detected in the state $|e\rangle_{a_2}$. The atom a_2 was initially in the state $|e\rangle_{a_2}$ as well, and hence this means that in its flight it has not lost its energy by dumping any photon. Now choosing the velocity of a_2 (corresponding to the flight time t_{22}) through the cavity C_2 to be $v_{a_2} = 161$ m/s and $k(a_2; C_2) = 1$, it follows that in this case Bob's state is given by

$$\begin{aligned}|\psi\rangle_B = N_1\big(&\big(-\alpha_1(t_{12})\alpha_1(t_{23}) + \alpha_2(t_{12})\alpha_1(t_{23})\big)|1\rangle_{C_2}|0\rangle_{C_3} \\ &- \big(\alpha_1(t_{12})\alpha_2(t_{23}) + \alpha_2(t_{12})\alpha_2(t_{23})\big)|0\rangle_{C_2}|1\rangle_{C_3}\big)\end{aligned} \tag{8}$$

where, $N_1 = 1/\sqrt{1 - 2\alpha_2(t_{12})\alpha_1(t_{12})(\alpha_1^2(t_{23}) - \alpha_2^2(t_{23}))}$. Note here that with the above choice of the velocity v_{a_2} and $k(a_2; C_2)$, the possibility of obtaining a two-photon state such as $|1\rangle_{C_2}|1\rangle_{C_3}$ gets ruled out (since $\alpha_1(t_{22}) = 0$ and $\alpha_2(t_{22}) = 1$). Further, let us choose $v_{a_1} = 179$ m/s and $k(a_1; C_2) = 1$ (i.e., $\alpha_1(t_{12}) = 1/\sqrt{2} = \alpha_2(t_{12})$), such that the first term on the r.h.s. of Eq. (8) vanishes. With such a choice of the interaction parameters, it follows that Bob can find the photon in cavity C_3 only, but not in C_2. In other words, in the case when Alice detects no photon in her cavity C_1, if Bob detects a single photon, it must be in cavity C_3, and not in cavity C_2. Now, reversing this argument, if Bob detects a photon in cavity C_2, and nothing in C_3 (it follows from Eqs. (6) and (8), that such an outcome occurs with a finite probability given by $1 - \alpha_1^2(t_{11})\alpha_2^2(t_{23})$), then Alice *cannot* detect no photons inside her cavity C_1, i.e., she must detect a single photon there, since this is the only other possible outcome.

Note here that in the above argument we have specifically chosen to describe the case when the atom is detected in the excited state $|e\rangle_{a_2}$. However, it needs to be mentioned that a similar argument can also be constructed in the case when the atom is detected in the ground state $|g\rangle_{a_2}$. The only difference between the two cases are the values of the experimental parameters required for the scheme to work out. For example, the state corresponding to Eq. (8) in the latter case would be given by $N_1[-\alpha_1(t_{23})(\alpha_1(t_{12}) + \alpha_2(t_{12}))|1\rangle_{C_2}|0\rangle_{C_3} + \alpha_2(t_{23})(\alpha_2(t_{12}) - \alpha_1(t_{12}))|0\rangle_{C_2}|1\rangle_{C_3}]$, where $N_1^2 = 1/(1 + 2\alpha_1(t_{12})\alpha_2(t_{12})(\alpha_1^2(t_{23}) - \alpha_2^2(t_{23})))$ with the probability of detection of a_2 in ground state being $1/(2N_1^2)$. It follows that in this case one would require $v_{a_1} = 146$ m/s (in stead of 179 m/s as required in the former case) in order to ensure that the photon is found in cavity C_3 and not in C_2.

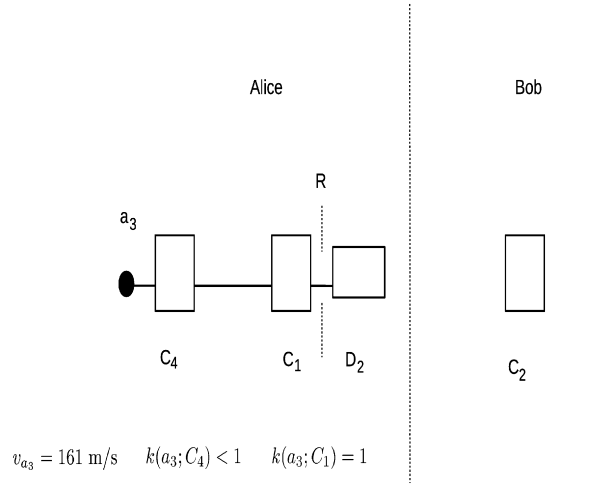

Fig. 3. Set-up for Experiment 3. Bob checks directly for a photon in cavity C_2. Alice passes the atom a_3, initially in its upper level, through C_4 and C_1, before detecting it at D_2 again in its upper level. ($v_{a_3} = 161$ m/s, $k(a_3; C_1) = 1$, $k(a_3; C_4) < 1$.)

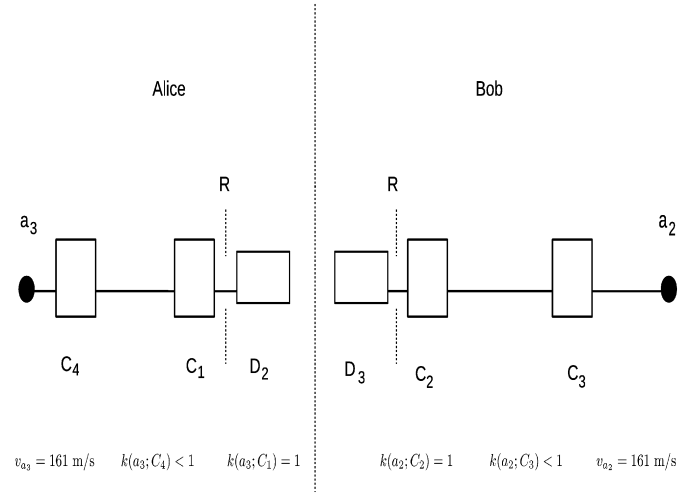

Fig. 4. Set-up for Experiment 4. Alice does the same as she did in Experiment 3, while Bob does the same as in Experiment 2.

Experiment 3. This is similar to Experiment 2, with the roles of Alice and Bob reversed. Bob checks whether the photon is present inside his cavity C_2, as in Experiment 1. Alice takes her auxiliary cavity C_4 in state $|0\rangle_{C_4}$ and passes another atom a_3 in state $|e\rangle_{a_3}$ (shown in Fig. 3) through C_4 and C_1 with flight times t_{34} and t_{31} respectively. Alice then applies a $\frac{\pi}{2}R_1$ pulse on a_3, before detecting it at D_2. Now consider the case when Bob detects no photon inside his cavity C_2. Further, suppose that a_3 is detected by Alice in the state $|e\rangle_{a_3}$. Then, by choosing the value $v_{a_3} = 161$ m/s and $k(a_3; C_1) = 1$, it follows that in this case Alice's state is given by

$$|\psi\rangle_A = N_3\big(\big(-\alpha_1(t_{11})\alpha_1(t_{12})\alpha_1(t_{34}) + \alpha_1(t_{34})\alpha_2(t_{11})\big)|0\rangle_{C_4}|1\rangle_{C_1} - \big(\alpha_1(t_{11})\alpha_1(t_{12})\alpha_2(t_{34}) + \alpha_2(t_{34})\alpha_2(t_{11})\big)|1\rangle_{C_4}|0\rangle_{C_1}\big) \tag{9}$$

with $N_3 = 1/(\frac{\alpha_1^2(t_{11})}{2} + \alpha_2^2(t_{11}) - \sqrt{2}\alpha_1(t_{11})\alpha_2(t_{11})(\alpha_1^2(t_{34}) - \alpha_2^2(t_{34})))^{1/2}$. Using the value of $\alpha_1(t_{12}) = 1/\sqrt{2}$ from Experiment 2, it follows that the first term on the r.h.s. of Eq. (9) vanishes when we set $v_{a_1} = 179$ m/s and $k(a_1; C_1) = 0.979$ (i.e., $\alpha_1(t_{11}) = \sqrt{2}\alpha_2(t_{11})$). Hence, Alice can find the photon in cavity C_4 only, but not in C_1. In other words, in the case when Bob detects no photon in his cavity C_2, if Alice detects a single photon, it must be in cavity C_4, and not in cavity C_1. Now, reversing this argument, if Alice detects a photon in cavity C_1, and nothing in C_4 (it follows from Eqs. (6) and (9), that such an outcome occurs with a finite probability given by $1 - \alpha_2^2(t_{34})\alpha_1^2(t_{11})$), then Bob *cannot* detect no photons inside his cavity C_2, i.e., he must detect a single photon there, since this is the only other possible outcome.

Experiment 4. In this experiment (shown in Fig. 4) Alice and Bob both use there auxiliary cavities. Alice passes her atom a_3 through C_4 and C_1, and Bob passes his atom a_2 through C_3 and C_2. Further, both apply $\frac{\pi}{2}R_1$ pulses on their atoms which are subsequently detected in their upper states $|e\rangle_{a_3}$ and $|e\rangle_{a_2}$ respectively. One of the possibilities of this experiment is that Alice detects a photon in cavity C_1 and nothing in C_4, while Bob detects a photon in cavity C_2 and nothing in C_3, as is reflected from the following term

$$\begin{aligned}|\psi\rangle_{AB} = \big[&-\alpha_1(t_{11})\alpha_1(t_{12})\alpha_1(t_{23})\alpha_1(t_{34})\alpha_2(t_{31})\alpha_2(t_{22}) \\ &+ \alpha_1(t_{11})\alpha_1(t_{12})\alpha_1(t_{23})\alpha_1(t_{34})\alpha_2(t_{31}) \\ &+ \alpha_2(t_{11})\alpha_1(t_{23})\alpha_1(t_{34})\alpha_2(t_{22})\big]|1\rangle_{C_1}|1\rangle_{C_2}|0\rangle_{C_3}|0\rangle_{C_4} \\ &+ \cdots\end{aligned} \tag{10}$$

in their joint state $|\psi\rangle_{AB}$. Such an outcome occurs with the probability $0.0847\alpha_1^2(t_{23})\alpha_1^2(t_{34})$. Note here that one can choose values for the parameters $k(a_2; C_3)$ and $k(a_3; C_4)$ such that this probability is non-vanishing. The maximum probability 0.0847 occurs for $k(a_2; C_3) = k(a_3; C_4) = 0.8$ ($\alpha_1(t_{23}) = \alpha_1(t_{34}) = 1$).

The result of Experiment 4 leads to a contradiction when combined with the other experiments, as follows. Once Alice finds a photon in cavity C_1, following the logic of Experiment 3 she infers that Bob must find a photon if he were to check *directly* for it in his cavity C_2 *without* using auxiliary resources of C_3 and a_2. Similarly, on finding a photon in cavity C_2, Bob infers using the logic of Experiment 2 that Alice would find a photon in C_1 if she were to check *directly* for it in her cavity C_1 *without* using auxiliary resources of C_4 and a_3. However, they both cannot be right, since it follows from the result of Experiment 1 that both Alice and Bob could never detect a photon each by *directly* checking for it in their respective cavities C_1 and C_2 *without* using their auxiliary resources. The contradiction arises from the fact that the above inferences of Alice and Bob are based on the criterion of locality [10]. The consideration of locality leads to the assumption that the probability of Bob obtaining an outcome is independent of the experiment Alice performs, and vice versa. There is no contradiction if one does not use this assumption of locality, and hence, the conclusion follows about the nonlocality of the single photon state (6).

5. Concluding remarks

Before concluding, it is worth mentioning certain points of comparison of our proposal for testing the nonlocality of single photon states using cavities and two-level atoms, with the earlier schemes of Hardy [10] and Dunningham and Vedral [13]. Apart from the analogous nature of the argument leading to the above-mentioned contradiction with the locality assumption, the algebra of the relevant states bears formal resemblance to those used in the earlier works [10,13]. This is to be expected since at the level of state preparation what we have done in the present scheme is to replace the beam-splitter and incident vacuum modes by a two-level atom passing through two initially empty cavities. There are some additional differences from the earlier schemes in the detection mechanism used in Experiments 2, 3 and 4. Here we employ auxiliary cavities and additional two-level atoms, in stead of the homodyne detection scheme. In the present scheme two-photon terms simply drop out by the choice of interaction parameters, whereas, in the scheme [13] state truncation is required to en-

sure that the possibility of the presence of two photon states is avoided. Note that the choice of the velocities of the atoms that we have proposed in the various experiments ($v_{a_1} = 179$ m/s, and $v_{a_2} = 161$ m/s $= v_{a_3}$) fall within the thermally accessible range of velocities [18,19]. The values for the other interaction parameter ($k \equiv \hat{\mathbf{d}}_{eg}.\hat{\mathbf{e}}(\mathbf{r})$) that we have chosen ($k(a_1; C_1) = 0.979$, $k(a_1; C_2) = k(a_2; C_2) = k(a_3; C_1) = 1$, and $k(a_2; C_3) < 1$, $k(a_3; C_4) < 1$), should also be attainable. Further, making use of resonant interactions between atoms and cavities enables us to avoid using coherent [10] or mixed [13] states that may be difficult to create experimentally. To summarize, our proposal is based on generating atom–cavity entanglement that has already been practically operational for many years now [17]. Thus, our scheme should facilitate testing the nonlocality of single photons in an actual experiment free of conceptual loopholes.

References

[1] A. Einstein, B. Podolsky, N. Rosen, Phys. Rev. 47 (1935) 777.
[2] J.S. Bell, Physics 1 (1964) 195.
[3] A. Aspect, P. Grangier, G. Roger, Phys. Rev. Lett. 47 (1981) 460;
A. Aspect, P. Grangier, G. Roger, Phys. Rev. Lett. 49 (1982) 91;
A. Aspect, J. Dalibard, G. Roger, Phys. Rev. Lett. 49 (1982) 1804;
W. Tittel, J. Brendel, H. Zbinden, N. Gisin, Phys. Rev. Lett. 81 (1998) 3563;
J.W. Pan, D. Bouwmeester, M. Daniell, H. Weinfurter, A. Zeilinger, Nature 403 (2000) 515.
[4] M. Jammer, The Philosophy of Quantum Mechanics, Wiley-Interscience Publications, New York, 1974, p. 115.
[5] S.M. Tan, D.F. Walls, M.J. Collett, Phys. Rev. Lett. 66 (1991) 252.
[6] E. Santos, Phys. Rev. Lett. 68 (1992) 894;
S.M. Tan, D.F. Walls, M.J. Collett, Phys. Rev. Lett. 68 (1992) 895.
[7] S. Basu, S. Bandyopadhyay, G. Kar, D. Home, Phys. Lett. A 279 (2001) 281;
Y. Hasegawa, R. Loidl, G. Badurek, M. Baron, H. Rauch, Nature 425 (2003) 45.
[8] S. Adhikari, A.S. Majumdar, D. Home, A.K. Pan, Europhys. Lett. 89 (2010) 10005;
T. Pramanik, S. Adhikari, A.S. Majumdar, D. Home, A.K. Pan, Phys. Lett. A 374 (2010) 1121.
[9] L. Hardy, Phys. Rev. Lett. 71 (1993) 1665.
[10] L. Hardy, Phys. Rev. Lett. 73 (1994) 2279.
[11] D.M. Greenberger, M.A. Horne, A. Zeilinger, Phys. Rev. Lett. 75 (1995) 2064.
[12] D. Home, G.S. Agarwal, Phys. Lett. A 209 (1995) 1.
[13] J. Dunningham, V. Vedral, Phys. Rev. Lett. 99 (2007) 180404.
[14] B. Hessmo, P. Usavech, H. Heydari, G. Bjork, Phys. Rev. Lett. 92 (2004) 180401.
[15] J.M. Raimond, M. Brune, S. Haroche, Rev. Mod. Phys. 73 (2001) 565.
[16] B.-G. Englert, M.O. Scully, H. Walther, J. Mod. Opt. 47 (2000) 2213;
A.S. Majumdar, N. Nayak, Phys. Rev. A 64 (2001) 013821;
A. Datta, B. Ghosh, A.S. Majumdar, N. Nayak, Europhys. Lett. 67 (2004) 934;
P. Lougovski, H. Walther, E. Solano, Eur. J. Phys. D 38 (2006) 423;
B. Ghosh, A.S. Majumdar, N. Nayak, Phys. Rev. A 74 (2006) 052315.
[17] G. Rempe, F. Schmidt-Kaler, H. Walther, Phys. Rev. Lett. 64 (1990) 2783;
M. Brune, S. Haroche, V. Lefevre, J.M. Raimond, N. Zagury, Phys. Rev. Lett. 65 (1990) 976;
M.O. Scully, G.M. Meyer, H. Walther, Phys. Rev. Lett. 76 (1996) 4144;
A. Rauschenbeutel, G. Nogues, S. Osnaghi, P. Bertet, M. Brune, J.M. Raimond, S. Haroche, Phys. Rev. Lett. 83 (1999) 5166;
F. Cassagrande, A. Ferraro, A. Lulli, R. Bonifacio, E. Solano, H. Walther, Phys. Rev. Lett. 90 (2003) 183601;
P. Maioli, T. Meunier, S. Gleyzes, A. Auffeves, G. Nogues, M. Brune, J.M. Raimond, S. Haroche, Phys. Rev. Lett. 94 (2005) 113601.
[18] B. Sherman, G. Kurizki, A. Kadyshevitch, Phys. Rev. Lett. 69 (1992) 1927;
M. Konôpka, V. Bužek, Eur. Phys. J. D 10 (2000) 285;
N. Vats, T. Rudolph, J. Mod. Opt. 48 (2001) 1495.
[19] D.G. Angelakis, P.L. Knight, Eur. Phys. J. D 18 (2002) 247.